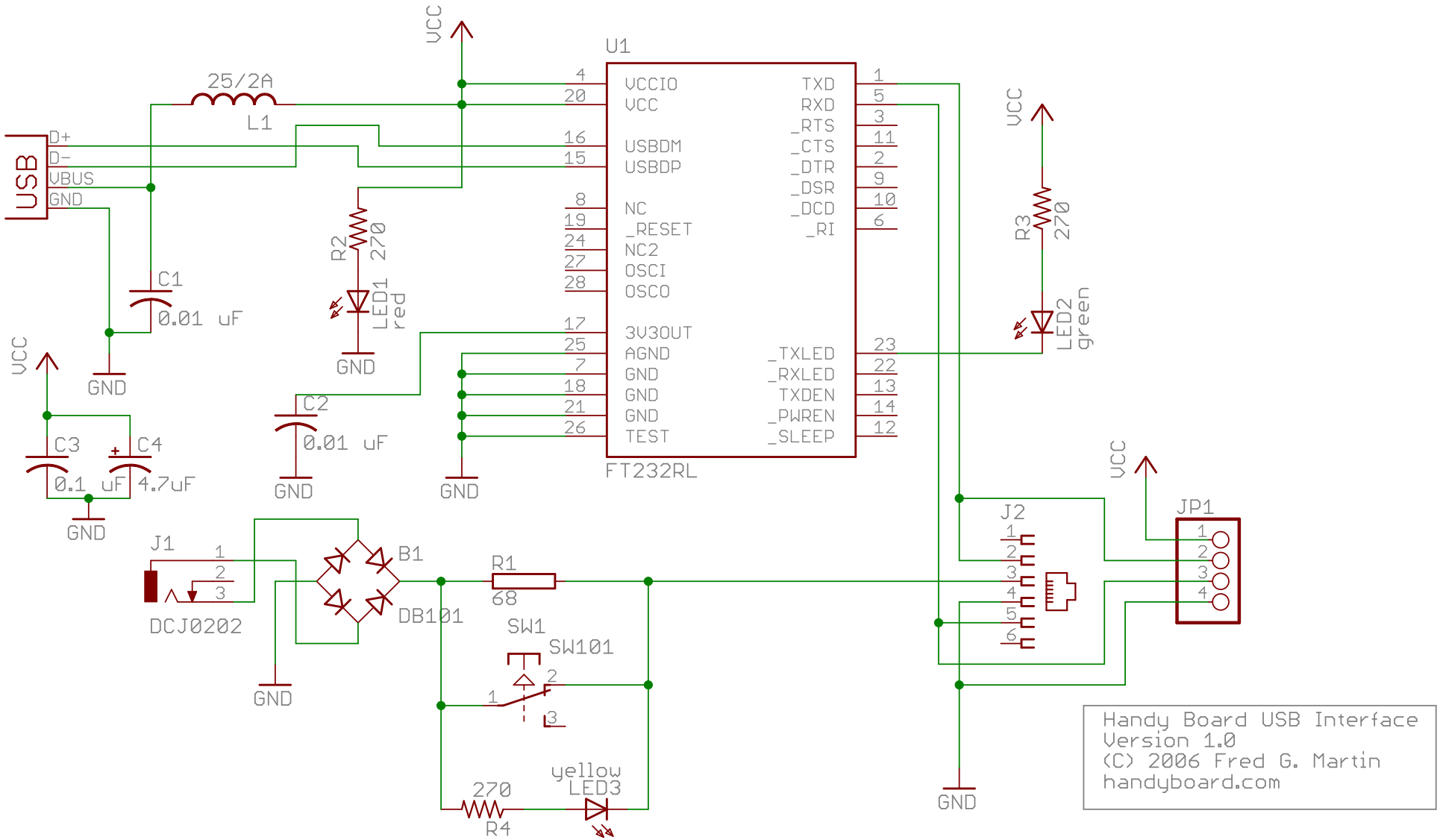

6/23/09 12:37 AM f=1.45 /Users/fredm/Documents/hb/usb/hbusbint.sch (Sheet: 1/1)